NTA SERIES

Isolated 1W Dual Output SM DC/DC Converters

FEATURES

- RoHS compliant
- Efficiency up to 78%
- Wide temperature performance at full 1 Watt load, –40°C to 85°C
- UL 94V-0 Package material
- Footprint over pins 1.64cm²
- Lead frame technology
- 3.3V, 5V & 12V Input
- 3.3V, 5V, 9V, 12V & 15V Output
- Internal SMD construction
- Toroidal magnetics
- 1kVDC Isolation
- MTTF up to 2.1 Million hours
- Power density 1.36W/cm³
- No heatsink required
- Custom solutions available
- Multi-layer ceramic capacitors

DESCRIPTION

The NTA series of miniature surface mounted DC/DC Converters employ leadframe technology and transfer moulding techniques to bring all of the benefits of IC style packaging to hybrid circuitry. Co-planarity of the lead positions is based upon IEC 191-6:1990. The devices are suitable for all applications where high volume production is envisaged.

SELECTION GUIDE

Order Code[1]	Nominal Input Voltage	Output Voltage	Output Current	Input Current at Rated Load	Efficiency	Isolation Capacitance	MTTF[2]
	V	V	mA	mA	%	pF	kHrs
NTA0303MC	3.3	±3.3	±152	402	75	29	1005
NTA0305MC	3.3	±5	±100	388	78	30	399
NTA0309MC	3.3	±9	±55	405	75	34	827
NTA0312MC	3.3	±12	±42	390	77	40	375
NTA0315MC	3.3	±15	±33	392	77	42	206
NTA0503MC	5	±3.3	±152	259	77	31	964
NTA0505MC	5	±5	±100	290	69	33	1697
NTA0505MEC	5	±5	±100	251	80	42	367
NTA0509MC	5	±9	±55	267	75	38	682
NTA0512MC	5	±12	±42	260	77	44	343
NTA0515MC	5	±15	±33	256	78	43	188
NTA1205MC	12	±5	±100	121	69	50	559
NTA1209MC	12	±9	±55	113	74	72	375
NTA1212MC	12	±12	±42	111	75	89	243
NTA1215MC	12	±15	±33	110	76	100	154

When operated **with** additional external load capacitance the rise time of the input voltage will determine the maximum external capacitance value for guaranteed start up. The slower the rise time of the input voltage the greater the maximum value of the additional external capacitance for reliable start up.

INPUT CHARACTERISTICS

Parameter	Conditions	MIN.	TYP.	MAX.	Units
Voltage range	Continuous operation, 3V input types	2.97	3.3	3.63	V
	Continuous operation, 5V input types	4.5	5	5.5	
	Continuous operation, 12V input types	10.8	12	13.2	
Reflected ripple current			41	50	mA p-p

ISOLATION CHARACTERISTICS

Parameter	Conditions	MIN.	TYP.	MAX.	Units
Isolation voltage	Flash tested for 1 second	1000			VDC
Resistance	Viso= 1000VDC	10			GΩ

GENERAL CHARACTERISTICS

Parameter	Conditions	MIN.	TYP.	MAX.	Units
Switching frequency	0312MC, 0315MC		100		kHz
	0303MC, 0305MC, 0503MC, 0505MEC		110		
	All other variants		115		

ABSOLUTE MAXIMUM RATINGS

Short-circuit protection[3]	1 second
Lead temperature 1.5mm from case for 10 seconds	300°C
Internal power dissipation	700mW
Input voltage V_{IN}, NTA03 types	5.5V
Input voltage V_{IN}, NTA05 types	7V
Input voltage V_{IN}, NTA12 types	15V

1. If components are required in tape and reel format suffix order code code with -R, e.g. NTA0505MC-R.
2. Calculated using MIL-HDBK-217F with nominal input voltage at full load.
3. Supply voltage must be disconnected at the end of the short circuit duration.

All specifications typical at T_A=25°C, nominal input voltage and rated output current unless otherwise specified.

RoHS COMPLIANT 2002/95/EC

OUTPUT CHARACTERISTICS					
Parameter	Conditions	MIN.	TYP.	MAX.	Units
Rated Power	T_A=-40°C to 85°C			1.0	W
Voltage Set Point Accuracy	See tolerance envelope				
Line regulation	High V_{IN} to low V_{IN}		1.0	1.2	%/%
Load Regulation[1]	10% load to rated load, 0303MC & 0503MC		10	15	%
	10% load to rated load, 5V output types		10	12	
	10% load to rated load, 0309MC		9.0	10	
	10% load to rated load, 0509MC & 1209MC		6.5	8.0	
	10% load to rated load, 0312MC & 0315MC		11	14	
	10% load to rated load, 0512MC & 1212MC		6.0	8.5	
	10% load to rated load, 0515MC & 1215MC		6.0	7.0	
Ripple and Noise	BW=DC to 20MHz, 3.3V output types, NTA0305MC & NTA0505MEC		40	80	mV p-p
	BW=DC to 20MHz, all other 5V output types		50	100	
	BW=DC to 20MHz, 9V output types		35	80	
	BW=DC to 20MHz, 12V output types		50	110	
	BW=DC to 20MHz, 15V output types		65	110	

TEMPERATURE CHARACTERISTICS					
Parameter	Conditions	MIN.	TYP.	MAX.	Units
Specification	All output types	-40		85	°C
Storage		-55		125	
Case temperature rise above ambient	0305MC, 0505MEC, 0312MC, 0315MC		19		
	0303MC, 0309MC, 0503MC		25		
	0505MC, 1205MC		46		
	All other variants		35		
Cooling	Free air convection				

TECHNICAL NOTES

ISOLATION VOLTAGE

'Hi Pot Test', 'Flash Tested', 'Withstand Voltage', 'Proof Voltage', 'Dielectric Withstand Voltage' & 'Isolation Test Voltage' are all terms that relate to the same thing, a test voltage, applied for a specified time, across a component designed to provide electrical isolation, to verify the integrity of that isolation.

C&D Technologies NTA series of DC/DC converters are all 100% production tested at their stated isolation voltage. This is 1kVDC for 1 second.

A question commonly asked is, "What is the continuous voltage that can be applied across the part in normal operation?"

For a part holding no specific agency approvals, such as the NTA series, both input and output should normally be maintained within SELV limits i.e. less than 42.4V peak, or 60VDC. The isolation test voltage represents a measure of immunity to transient voltages and the part should never be used as an element of a safety isolation system. The part could be expected to function correctly with several hundred volts offset applied continuously across the isolation barrier; but then the circuitry on both sides of the barrier must be regarded as operating at an unsafe voltage and further isolation/insulation systems must form a barrier between these circuits and any user-accessible circuitry according to safety standard requirements.

REPEATED HIGH-VOLTAGE ISOLATION TESTING

It is well known that repeated high-voltage isolation testing of a barrier component can actually degrade isolation capability, to a lesser or greater degree depending on materials, construction and environment. The NTA series has toroidal isolation transformers, with no additional insulation between primary and secondary windings of enameled wire. While parts can be expected to withstand several times the stated test voltage, the isolation capability does depend on the wire insulation. Any material, including this enamel (typically polyurethane) is susceptible to eventual chemical degradation when subject to very high applied voltages thus implying that the number of tests should be strictly limited. We therefore strongly advise against repeated high voltage isolation testing, but if it is absolutely required, that the voltage be reduced by 20% from specified test voltage.

This consideration equally applies to agency recognized parts rated for better than functional isolation where the wire enamel insulation is always supplemented by a further insulation system of physical spacing or barriers.

1. 12V input types have typically 3% less load regulation change.

TOLERANCE ENVELOPES

Tolerance Envelope - 3.3V output types.

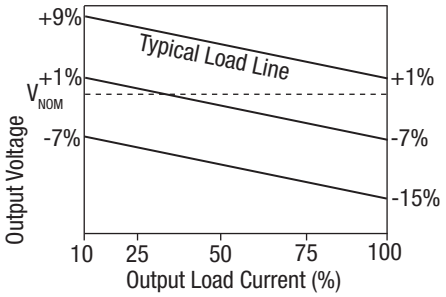

All other types.

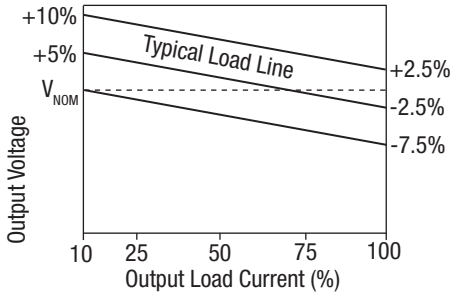

PACKAGE SPECIFICATIONS

MECHANICAL DIMENSIONS

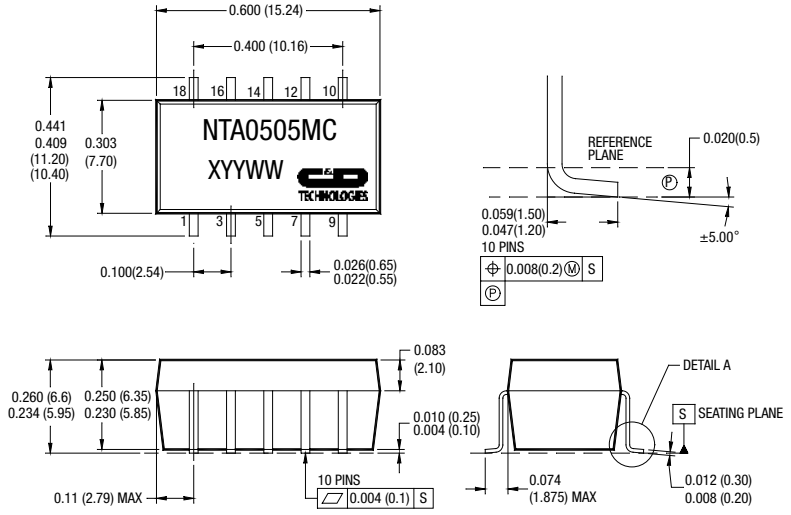

All dimensions in inches ±0.01 (mm ±0.25mm). All pins on a 0.1 (2.54) pitch.

Weight: 1.53g

PIN CONNECTIONS

Pin	Function
1	$-V_{IN}$
3	$+V_{IN}$
5	NA
7	0V
9	$-V_{OUT}$
10	NA
12	$+V_{OUT}$
14	NA
16	NA
18	NA

NA - Not available for electrical connection.

RECOMMENDED FOOTPRINT DETAILS

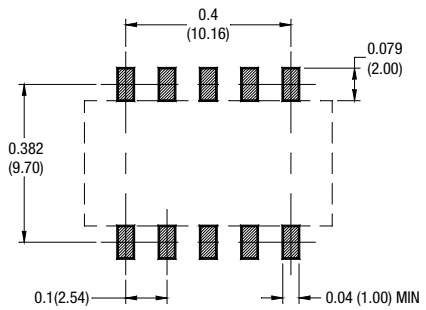

TUBE OUTLINE DIMENSIONS

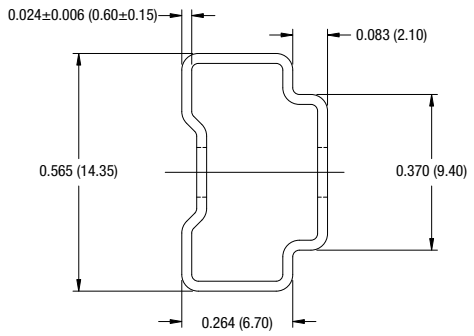

Unless otherwise stated all dimensions in inches ±0.02 (mm±0.5).
Tube length : 18.70±0.07 (475±2.0).

Tube Quantity : 25

TAPE & REEL SPECIFICATIONS

REEL OUTLINE DIMENSIONS

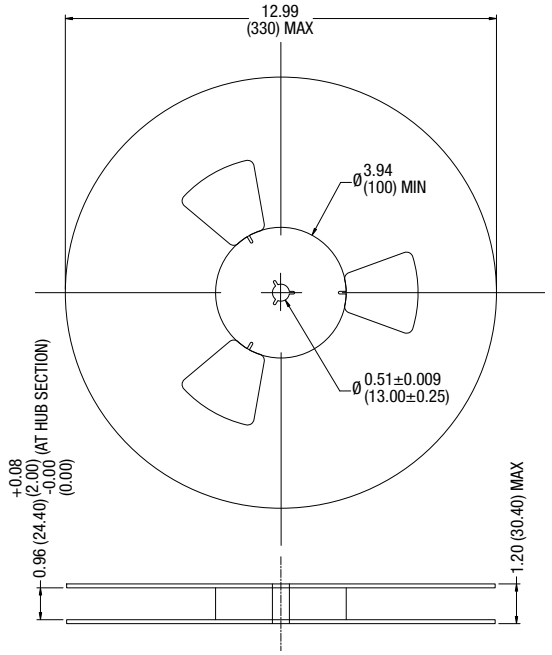

TAPE OUTLINE DIMENSIONS

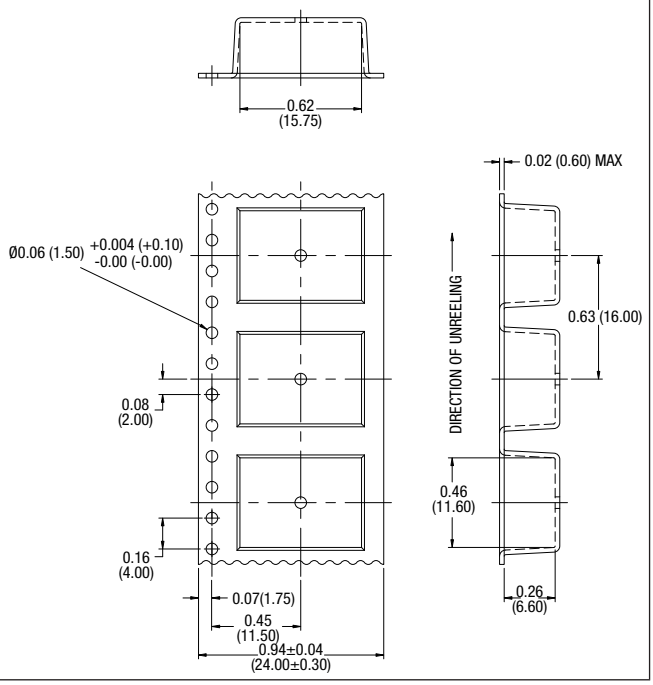

REEL PACKAGING DETAILS

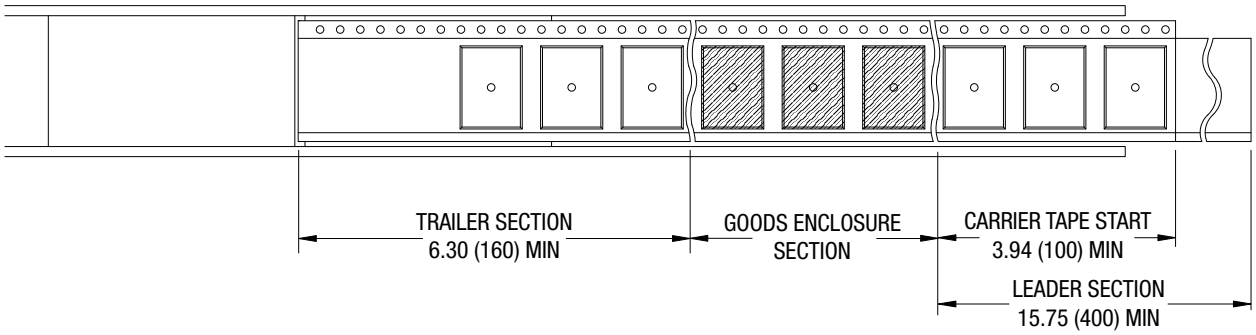

Reel Quantity : 500

TEMPERATURE DERATING GRAPH

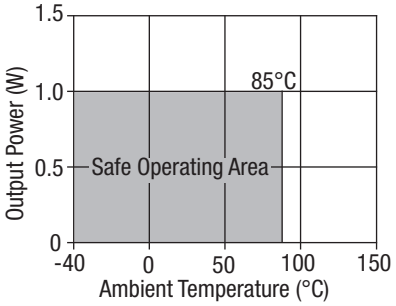

RoHS COMPLIANCE INFORMATION

This series is compatible with RoHS soldering systems with a peak reflow solder temperature of 245ºC and time above liquidus of 217ºC for 80 seconds. The pin termination finish on this product series is Gold, plating thickness 0.1 microns minimum. The series is backward compatible with Sn/Pb soldering systems.

For further information, please visit www.cd4power.com/rohs

C&D TECHNOLOGIES

C&D Technologies (NCL) Ltd
Tanners Drive, Blakelands North
Milton Keynes MK14 5BU, UK

Tel: +44 (0)1908 615232
Fax: +44 (0)1908 617545
email: MK@cdtechno.com

C&D Technologies, Inc.
11 Cabot Boulevard, Mansfield,
MA 02048-1151, USA

Tel: +1 (508) 339-3000
Fax: +1 (800) 233-2765
email: sales@cdtechno.com